General overview

Construction Specifications

- 4" and 6"Ø Extraction Arms are made with painted Steel
- All 8" and 10"Ø Extraction Arms are made with Aluminum

The arm extracts via a fully articulated tapered hood, allowing for tailored positioning for maximum efficiency. The hinge design offers external support for unobstructed airflow, and effortless positioning, all while offering durable construction for years of uninterrupted operation.

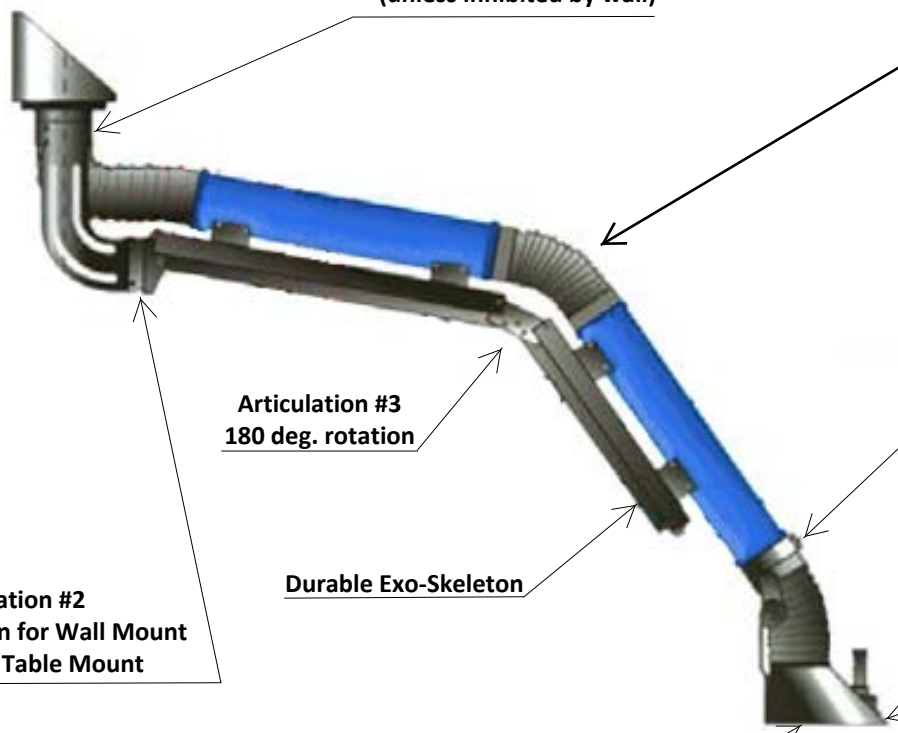

3 bracket options gives you the options between 180, and 340 degrees for column mounting, and 360 degree rotation on the ceiling mount.

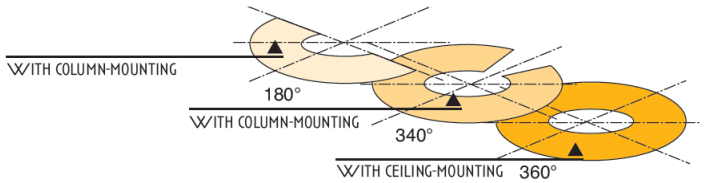

CUSTOMER:		Drawn By: Ammar Sheikh	**01-017 EVO Arm - Extraction Arm**
CUSTOMER PO:		Date: 2022-01-27	Specification Drawing
PROJECT:		Scale: NTS	
ENGINEER:		Weight: N/A	
SALES REP:			Drawing No: Sheet: 1 / 6
TAGGING:			File Name: Exo-3 Actual

The device depicted and described hereon embodies proprietary information owned by the manufacturer. All Design, manufacturing, reproduction, sales and patent rights regarding this device or drawing reserved except where explicit right is guaranteed in writing. We reserve the right to make design changes.

Copyright © 2021 by Lev-Co, The Local Exhaust and Ventilation Company Inc. All rights reserved. No part of this product may be reproduced or used in any manner without written permission of the copyright owner.

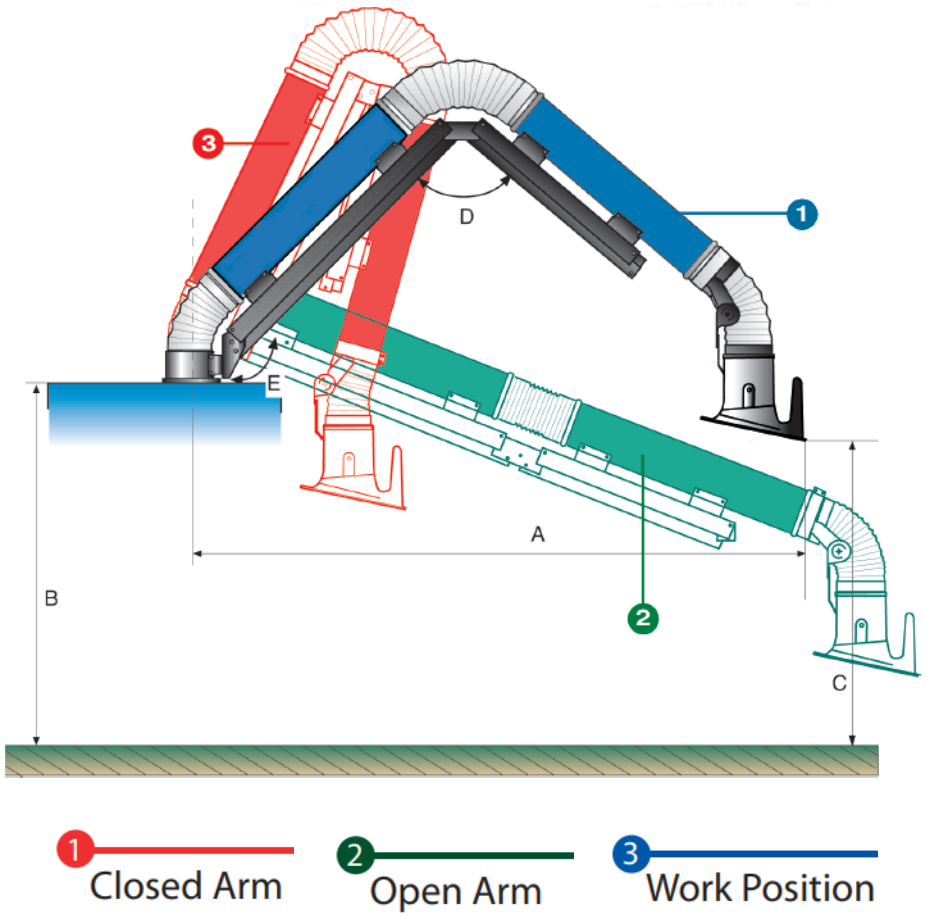

Table Mounted Extraction Arm

Arm Configurations	Part Number	Diameter (inches)	Total Length (ft)	Legnth (inches)			Max Angle of Rotation (deg.)	
				A	B	C	D	E
WORKPOSITION	EVO-4-9-T	4	9	78.7	/	/	110	125
	EVO-6-10-T	6	10	90.5	/	/	110	125
	EVO-8-10-T	8	10	66.9	/	/	75	125
	EVO-10-10-T	10	10	68.9	/	/	110	125
OPEN ARM	EVO-4-9-T	4	9	90.5	/	/	180	90
	EVO-6-10-T	6	10	102.3	/	/	180	90
	EVO-8-10-T	8	10	97.2	/	/	180	90
	EVO-10-10-T	10	10	98.8	/	/	180	90
CLOSED ARM	EVO-4-9-T	4	9	14.5	/	/	0	180
	EVO-6-10-T	6	10	25.2	/	/	0	180
	EVO-8-10-T	8	10	27.9	/	/	0	180
	EVO-10-10-T	10	10	27.5	/	/	0	180

CUSTOMER:
CUSTOMER PO:
PROJECT:
ENGINEER:
SALES REP:
TAGGING:

The device depicted and described hereon embodies proprietary information owned by the manufacturer. All Design, manufacturing, reproduction, sales and patent rights regarding this device or drawing reserved except where explicit right is guaranteed in writing. We reserve the right to make design changes.

Drawn By: Ammar Sheikh
Date: 2022-01-27
Scale: NTS
Weight: N/A

Copyright © 2021 by Lev-Co, The Local Exhaust and Ventilation Company Inc. All rights reserved. No part of this product may be reproduced or used in any manner without written permission of the copyright owner.

01-017 EVO Arm - Extraction Arm

Specification Drawing

Drawing No:
Sheet: 2 / 6
File Name:

Wall Mounted Extraction Arm

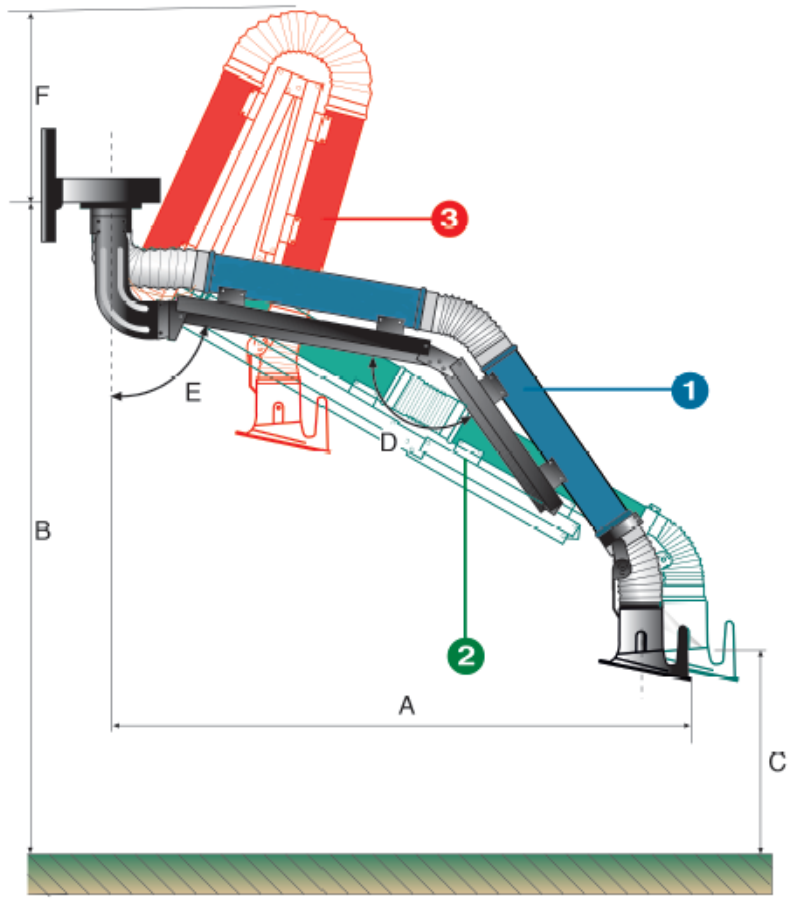

1 Closed Arm

2 Open Arm

3 Work Position

Arm Configurations	Part Number	Diameter (inches)	Total Length (ft)	Legnth (inches)				Max Angle of Rotation (deg.)	
				A	B	C	F	D	E
WORKPOSITION	EVO-4-9-W	4	9	86.6	118.1	59	/	110	100
	EVO-6-10-W	6	10	96.4	118.1	55.1	/	145	80
	EVO-6-13-W	6	13	129.9	118.1	78.7	/	110	120
	EVO-8-10-W	8	10	93.1	118.1	47.2	/	140	80
	EVO-8-13-W	8	13	125.9	118.1	55.1	/	115	105
	EVO-10-13-W	10	10	96.4	118.1	47.2	/	140	80
	EVO-10-13-W	10	13	129.1	118.1	55.1	/	115	105
OPEN ARM	EVO-4-9-W	4	9	86.6	118.1	47.2	/	145	78
	EVO-6-10-W	6	10	110.2	118.1	90.5	/	180	90
	EVO-6-13-W	6	13	141.7	118.1	59	/	150	90
	EVO-8-10-W	8	10	102.3	118.1	86.6	/	180	90
	EVO-8-13-W	8	13	146.8	118.1	87.8	/	180	90
	EVO-10-13-W	10	10	118.1	118.1	86.6	/	180	90
	EVO-10-13-W	10	13	157.4	118.1	87.8	/	180	90
CLOSED ARM	EVO-4-9-W	4	9	23.6	118.1	82.7	15.7	10	155
	EVO-6-10-W	6	10	35.4	118.1	82.7	53.1	10	150
	EVO-6-13-W	6	13	39.3	118.1	82.7	33.4	10	150
	EVO-8-10-W	8	10	31.5	118.1	77.5	56.3	10	150
	EVO-8-13-W	8	13	39.3	118.1	78.7	35.4	10	155
	EVO-10-13-W	10	10	39.3	118.1	77.5	37.4	10	150
	EVO-10-13-W	10	13	47.2	118.1	78.7	59	10	150

CUSTOMER:
CUSTOMER PO:
PROJECT:
ENGINEER:
SALES REP:
TAGGING:

The device depicted and described hereon embodies proprietary information owned by the manufacturer. All Design, manufacturing, reproduction, sales and patent rights regarding this device or drawing reserved except where explicit right is guaranteed in writing. We reserve the right to make design changes.

Drawn By: Ammar Sheikh
Date: 2022-01-27
Scale: NTS
Weight: N/A

Copyright © 2021 by Lev-Co, The Local Exhaust and Ventilation Company Inc.All rights reserved. No part of this product may be reproduced or used in any manner without written permission of the copyright owner.

01-017 EVO Arm - Extraction Arm

Specification Drawing

Drawing No:
Sheet: 3 / 6
File Name:

WALL BRACKET

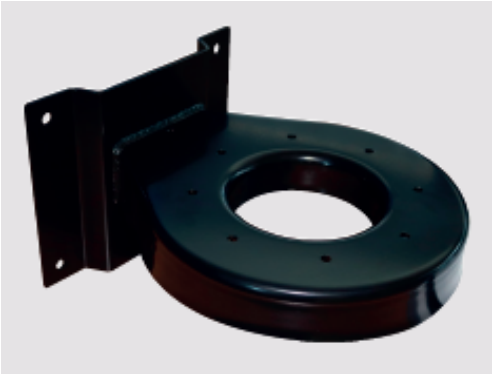

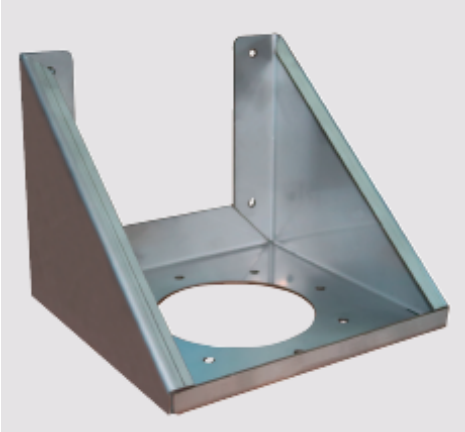

CUSTOMER:		The device depicted and described hereon embodies proprietary information owned by the manufacturer. All Design, manufacturing, reproduction, sales and patent rights regarding this device or drawing reserved except where explicit right is guaranteed in writing. We reserve the right to make design changes.	Drawn By: Ammar Sheikh
CUSTOMER PO:			Date: 2022-01-27
PROJECT:			Scale: NTS
ENGINEER:			Weight: N/A
SALES REP:			
TAGGING:			

Copyright © 2021 by Lev-Co, The Local Exhaust and Ventilation Company Inc.All rights reserved. No part of this product may be reproduced or used in any manner without written permission of the copyright owner.

01-017 EVO Arm - Extraction Arm

Specification Drawing

Drawing No:

Sheet: 4 / 6

File Name:

MODELS & OPTIONS

EVO Extraction Arms - Table Mounted Configuration

	Part #	Description
☐ ___	EVO-4-9-T	Evo Extraction Arm: 100mm (4”)Ø – 2.74m (9’)L. c/w hood, damper, and tabletop bracket.
☐ ___	EVO-6-10-T	Evo Extraction Arm: 152mm (6”)Ø – 3m (10’)L. c/w hood, damper, and tabletop bracket. Painted steel tubes.
☐ ___	EVO-8-10-T	Evo Extraction Arm: 203mm (8”)Ø – 3.04m (10’)L. c/w hood, damper, and tabletop bracket. Aluminum tubes.
☐ ___	EVO-10-10-T	Evo Extraction Arm: 254mm (10”)Ø – 3.04m (10’)L. c/w hood, damper, and tabletop bracket. Aluminum tubes.

EVO Extraction Arms - Wall Mounted Configuration

	Part #	Description
☐ ___	EVO-4-9-W	Evo Extraction Arm: 100mm (4”)Ø – 2.74m (9’)L. c/w hood, damper, and wall bracket. Painted steel tubes.
☐ ___	EVO-6-10-W	Evo Extraction Arm: 152mm (6”)Ø – 3m (10’)L. c/w hood, damper, and wall bracket. Painted steel tubes.
☐ ___	EVO-6-13-W	Evo Extraction Arm: 152mm (6”)Ø – 3.96m (13’)L. c/w hood, damper, and wall bracket. Painted steel tubes.
☐ ___	EVO-8-10-W	Evo Extraction Arm: 203mm (8”)Ø – 3m (10’)L. c/w hood, damper, and wall bracket. Aluminum tubes.
☐ ___	EVO-8-13-W	Evo Extraction Arm: 203mm (8”)Ø – 3.96m (13’)L. c/w hood, damper, and wall bracket. Aluminum tubes.
☐ ___	EVO-10-10-W	Evo Extraction Arm: 254mm (10”)Ø – 3.04m (10’)L. c/w hood, damper, and wall bracket. Aluminum tubes.
☐ ___	EVO-10-13-W	Evo Extraction Arm: 254mm (10”)Ø – 3.96m (13’)L. c/w hood, damper, and wall bracket. Aluminum tubes.

Copyright © 2021 by Lev-Co, The Local Exhaust and Ventilation Company Inc. All rights reserved. No part of this product may be reproduced or used in any manner without written permission of the copyright owner.

LOAD LOSSES
Extended Evolution No-Smoke Arm load losses

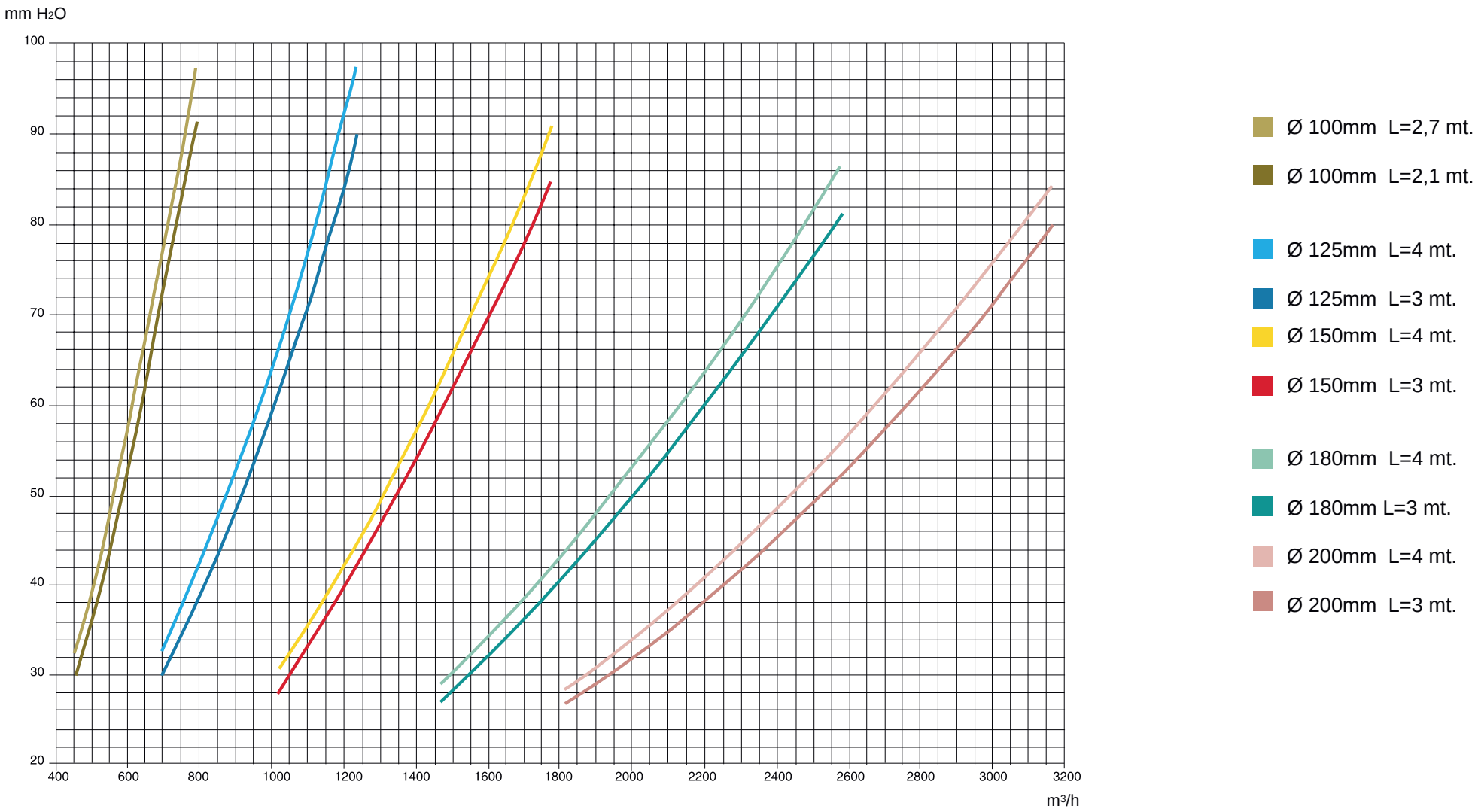

CUSTOMER:		Drawn By: MF	**EVO ARM PRESSURE LOSS CURVES**
CUSTOMER PO:		Date: 2022-05-06	
PROJECT:		Scale: NTS	PRESSURE LOSS CURVE
ENGINEER:			Drawing No: R0 Sheet: 6 / 6
SALES REP:			File Name:
TAGGING:			

The device depicted and described hereon embodies proprietary information owned by the manufacturer. All Design, manufacturing, reproduction, sales and patent rights regarding this device or drawing reserved except where explicit right is guaranteed in writing. We reserve the right to make design changes.

Copyright © 2022 by Lev-Co, The Local Exhaust & Ventilation Company Inc.All rights reserved. No part of this product may be reproduced or used in any manner without written permission of the copyright owner.